IRIS AperTO

UNIVERSITÀ DEGLI STUDI DI TORINO

AperTO - Archivio Istituzionale Open Access dell'Università di Torino

Sustainability of historical dimensional stone quarry in environmental and administrative complex situation: an underground option for the zandobbio marble (Italy)

This is a pre print version of the following article:

Original Citation:

Availability:

This version is available http://hdl.handle.net/2318/1690698 since 2019-02-06T13:03:32Z

Terms of use:

Open Access

Anyone can freely access the full text of works made available as "Open Access". Works made available under a Creative Commons license can be used according to the terms and conditions of said license. Use of all other works requires consent of the right holder (author or publisher) if not exempted from copyright protection by the applicable law.

(Article begins on next page)

12 October 2024

Sustainability of historical dimension stone quarry in environmental and administrative complex situation: an underground option for the Zandobbio marble (Italy)

Giuseppe Mandrone*
Andrea Filipello*
Andrea Giuliani**

* Dip. Scienze della Terra, Università degli studi di Torino, Italy
** AG3 Srl, Spin off Company of Torino University

Zandobbio Marble is a crystalline dolomite produced in an open pit quarry near Bergamo, Nord Italy. This ornamental stone was already used during the Roman age. For many years the quarry was inactive, until 2006 when it was re-opened. Local law on quarries requires the elaboration of an exploitation plan: its objective, and in general the objective of the environmental assessment, is to identify areas where future exploitation could be expected. Pending from many years the adoption of the plan, only a certain amount of material can be extracted. The paper summarizes the investigations to optimize the production of Zandobbio quarry, according to amount imposed by the plan, but also many other legal and environmental constraints had to be taken into account. Rock material and rock mass structure have been characterized through drill boreholes, laboratory tests and geo-structural surveys. Collected data are managed by GIS system and 3D modelling software. Taking into account geology, economic and administrative constraints, transition to underground spaces seems to be the only possible solution. 3D FEM deformative status analysis numerically confirmed this hipotesis. In conclusion, the paper demonstrate the sustainability and the feasibility of the underground option also for a small dimension stone quarry in the Alps.
***Keywords**: marble quarry, sustainability, underground exploitation, northern Italy.*

***Titolo in italiano.** Il Marmo di Zandobbio è una dolomia cristallina prodotta in una cava a cielo aperto vicino Bergamo, Italia Settentrionale. Si tratta di una pietra ornamentale storica, già utilizzzata in epoca Romana. Per molti anni questa cava è stata inattiva fino a quando, nel 2016, è stata riaperta. Le normative locali sulle cave richiedono l'elaborazione di un piano di coltivazione: il suo scopo – ed in generale quello della valutazione ambientale – è di identificare le aree dove si potranno sviluppare le coltivazioni future. In questa zona, però, detto piano è in attesa di adozione da anni per cui sono ammesse coltivazioni solo di modeste quantità eccedenti l'autorizzato. Il lavoro riassume gli studi eseguiti per ottimizzare l'impostazione della cava, ottemperando alle norme vigenti e tenendo inoltre conto degli innumerevoli vincoli ambientali ed amministrativi incombenti sull'area. Il materiala di cava e – più in generale – l'ammasso roccioso circostante l'attuale coltivazione è stato indagato con una serie di sondaggi geognostici, prove di laboratorio e rilevamenti geologico-tecnici di terreno. I dati così raccolti sono stati gestiti attraverso una piattaforma informatica in ambiente GIS e con modelli 3D. Alla luce della geologia e dei vincoli economici ed amministrativi, l'ipotesi di passare in sotterraneo sembra l'unica soluzione possibile in grado di assicurare un futuro a questa cava. Modelli ad elementi finiti 3D per l'analisi dello stato deformativo dell'ammasso roccioso hanno validato la fattibilità teorica di questa soluzione. In conclusione, il lavoro dimostra la sostenibilità dell'opzione sotterranea anche per questa piccola cava di roccia ornamentale pregiata in ambiente prealpino.*
***Parole chiave**: cava di marmo, sostenibilità, coltivazione in sotterraneo, Italia settentrionale.*

1. Introduction

The sustainability of quarries and mines in highly populated areas, especially where there is an high environmental value, have often been questioned (Balletto *et al.*, 2015; Vintro *et al.*, 2016).

This approach is making very difficult to continue old activities and to develope new ones. In detail, in the Italian Alps, presence of many environmental and administrative constraints complicates more and more the existence also of historical ornamental quarries, which materials are locally and/or widely used since antiquity (some since Roman times). On the other hand, mining activities in Italy has a tradition especially for high quality materials and in some areas had been an important factor for economic development. They still contribute substantially in terms of economic and social development.

As a matter of fact, international demand of dimensional stones continues to grow, especially with regard to valuable and high unit price materials. The report "Stone Sector" (Montani, 2013) indicates for 2012, an increase of Italian exports amounted to 1.8 billion euros, an increase of 9.8% compared to 2011. Globally, the share of Italian market of stone products stood at 13.78%. Another trend covers the progressive decline of granite, compensated by an increase in global demand in marble. In this context, it is essential the opening of new market niches, which also passes through the internationalization of dimension stone quarries of historical and architectural importance. Usually, these are valuable materials from small quarries characterized by a high historical value (Giuliani et al, 2010; Giuliani et al, 2012). To be able to develop and

to be competitive on the global market, these quarries must first overcome the difficulties imposed by the complexity of regulatory framework at local and national level (landscape restrictions and administrative limits) and also should overcome their geologic and geomechanic problems (Vintrò *et al.*, 2014). Italy is plenty of cases of ornamental stone deposits economically attractive, but not exploited for one or more of these reasons.

This paper deals with an example of an historic small in size dolomite quarry located in the Lombard Prealps (Bergamo, Northern Italy), in an area of scenic and tourist value. It is an open pit quarry, presently exploited on three working levels, cutting the base of the hill just in front of the village of Zandobbio (fig. 1). The extracted material has a strong commercial interest, but quarrying is hindered by the presence of many constraints. This paper addresses this issue from various points of view and try to provide a viable solution for future developments.

Fig 1. Aerial view of the white and pink Zandobbio marble quarry: 1) active quarry, 2) old quarry, 3) top face treated to accelerate aging, 4) Zandobbio village.
didascalia in italiano

1. Historical and cultural framework

The Zandobbio marble is an ornamental stone, high historic and architectural value, that is experiencing a renewed interest in the market. Merchandise is sold in two varieties: White and Pink. The material is used both for the restoration of historical monuments and for new buildings and is extracted from a single historical quarry, reactivated from 2006 onwards.

The historical evidence on the use of Zandobbio marble for artifacts, inscriptions and monuments are numerous and important, not only locally, but also international. Intensively used since Roman times (a Roman column is preserved in the Lower Town of Bergamo), it was widely adopted in Bergamo during The Renaissance up to the beginning of the XX Century. In the Fascist period, Zandobbio marble was also used outside the territory of Bergamo in some important architectural works, such as the Bolzano "Monumento alla Vittoria", the portico of the "Palazzo delle Assicurazioni" of Bologna, the United Nations building in Geneva (Switzerland) and the Capitolio (fig. 2), the former Parliament building in Havana (Cuba).

In the second half of the 20th century the use of ornamental stone in the buildings has decreased to the benefit of less valuable materials. This trend led to the closure of the Zandobbio marble quarry at the beginning of the eighties. The same quarry continued to produce dolomite as aggregates or to be used in glass industry. Dolomite quarries for industrial use are still active and are located in the eastern section of the Zandobbio Formation, a few kilometers to the east of the dimentional stone quarries, in correspondence of major tectonic

Fig. 2. Examples of historical realizations using Zandobbio marble: the parliament building in Havana – Cuba (left) and the Banco di Credito Bergamasco in Italy (right).
didascalia in italiano

features, which greatly increase the degree of fracturation and alteration.

2. *Geologic and Environmental framework*

The Zandobbio "marble" is a compact crystalline dolomite consisting in rhombohedral crystal filled with subordinated secondary sparry calcite and traces of self-produced albite. The scientific literature on the Dolomites Zandobbio is broad and diverse. According to the recent stratigraphic revision (Jadoul et Galli, 2008), it is considered as a member of the Albenza Jurassic Formation, Hettangian in age (around 200 Ma), with thickness of about 160 m, which outcrops in Lombard Preapine belt, east of Bergamo (fig. 3). During the Alpine orogeny, between Upper Cretaceous and Miocene, it was raised, folded and fractured until it assumed its current structural arrangement of an antiform.

The exploitation of the Zandobbio Marble with petrographic, mineralogical and structural characteristics suitable for the ornamental use can occur only in a limited area, located at the anticline complex as the degree of fracturation and the texture of the material are related to the structural evolution of the area. For these reasons, the ornamental stone quarries are limited to small areas. Therefore, geological influence – at regional scale – location of the deposit, while at a local scale influences setting and techniques of exploitation.

Looking at the outcrops in the test site, stratification is hardly noticeable, while it is not distinguishable at all on the hand sample. The rock mass has a massive appearance that is interrupted by intensely fractured areas, rich in karst voids partially or totally recrystallized due to intense diagenesis and circulation of hydrothermal fluids. Structural in-

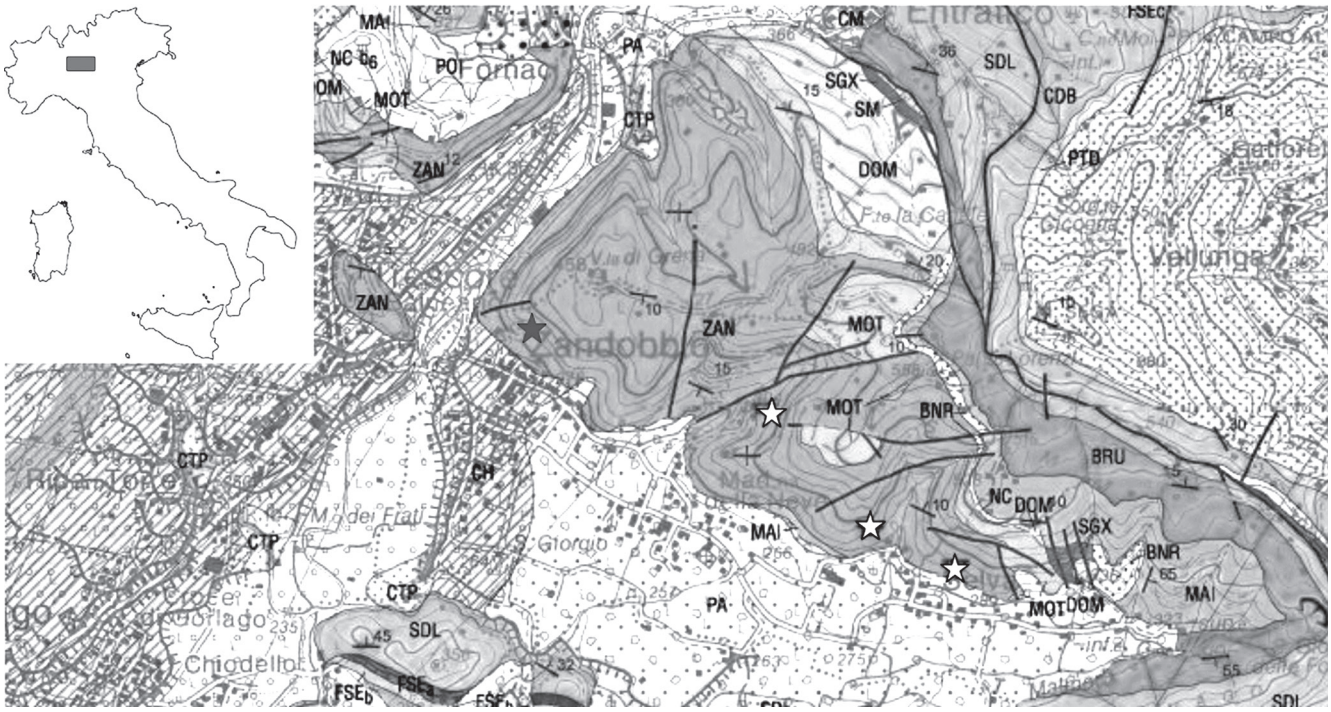

Fig. 3. Geologiacl map of the Zandobbio Marble area, modified from "Carta Geologica d'Italia (1:50.000)" with overprinted quarries (blue star: ornamental stone quarry; white stars: quarries for industrial material). Legend: PA: massive or roughly stratified silt and silty clay, slope or debriflow deposit; CTP: roughly stratified conglomerate with arenaceous matrix; CH: gravel with subrounded clasts (alluvial deposits); clayey-silty diamicton (debris flow deposits); PTD: alternance of sandstones and shales; CDB: Grey silty marlstones; FSE: red marlstones, chaotic calcareous bodies, thin bedded turbiditic sandstones; SDL: grey marlstone and calcareous marlstone, locally reddish; BRU: black to purple red shales and marlstones followed by thick alternances of arenaceous-pelitic and marly calcareous turbidites; MAI: succession of white, light grey or cream coloured calcilutites; BNR: paraconglomerate and limestone breccias; DOM: light grey, marly, chert-bearing limestones; ZAN (Zandobbio dolomite): dolomicrites and oolithic doloarenites, white or pink.

didascalia in italiano

sights has shown that majority of karst forms seem to be connected directly to the grid of fracturing. The main architect of the processes of dissolution and precipitation is represented by joints systems, while karst systems are absent along bedding planes. The karst voids or areas of re-crystallization prevent the formation of marketable blocks and limit the yield of the deposit. These areas also have an influence on the overall stability of the slope and of the quarry.

The Quaternary deposits in the test site are alluvial or torrential (debris flow). The deposits are located on the valley floor, where they form alluvial terraces, mainly conglomerate, where is built the historic town of Zandobbio. The Quaternary evolution has seen an advance of the glacier that has repeatedly occupied the valley floor until reaching the edge of the Po plain, as evidenced by glacial deposits – belonging to the oldest phases – found just to the north of the study area.

The exploitation of a quarry must take into account not only geologic and hydrogeologic characteristics but also constraints imposed by the regulations to protect environment and landscape, planning instruments and, of course, properties of land (Abu Hanieh *et al.*, 2014). For the Zandobbio quarry, the mining local planning (Province of Bergamo) is done through the drafting of a plan that is currently undergoing strategic environmental assessment (the described situation is referred to 2015). Until the approval of the plan is allowed to extract only a preset amount of material that must be part of the authorized quarry project. The market competitiveness can be secured with a project of cultivation, until the approval of the provincial quarries plan, that provides the exploitation of the full quantity extractable indicated in the plan for the lithotype "Zandobbio Marble". In this way, the supply of the material will not be bound to administrative impediments or to planning choices.

Another aspect to be taken into account, is related to the limits of properties and the needs of landscape protection, which do not allow the retraction of the upper front and the top down resumption of cultivation. The top face was treated so to accelerate aging and confer the same aspect of the rocky surrounding outcrops, naturally weathered. The retraction of the edge would result in an increase in the environmental impact for the greater visibility of the quarry from the villages. In each case the property does not have all the necessary land for a retreat towards the mountain. Depending on such situation, it is not possible a further expansion of the quarry in the surface and the underground option seems the only choice that can reconcile the exploitation of the deposit with the reduction of environmental impacts, respecting administrative and planning constraints.

3. Productive needs and impact on the setting of exploitation

The productivity of a ornamental stone quarry responds to needs substantially different from industrial materials or aggregates quarries (Fornaro, 2001). Economic performance is indeed related to the percentage of blocks of regular shape and standard size obtained compared to the entire exploited volume. Moreover, the yield in the blocks depends primarily from the degree of fracturation of the rock mass and, in the case of Zandobbio marble, from the disposition of karst voids or processes of late recrystallization. Often the two aspects are related each other, at least as regards the spatial distribution. The primary purpose of the strategy of exploitation is to obtain blocks of sufficient size and shape to facilitate subsequent processing. This is obtainable choosing correctly dip and dip direction of quarry faces, in case of an open-pit quarry, or the direction of excavation for underground tunnels.

Currently, the exploitation of the Zandobbio marble quarry presents a setting of banks and fronts non-optimal regarding with the orientation of the main families of discontinuities. In fact, the excavations have revealed some fragile bands at high persistence that cut the fronts and the main squares with a low angle of inclination, limiting the production of regular blocks.

The technology for the cultivation is another factor that influences the performance of a dimentional stone quarry, also with the same geometric configuration of fronts or tunnels. Open-pit excavations, especially in calcareous materials, usually see the use of diamond wire. Currently, in the Zandobbio quarry, wire cuts determine the detachment of significant volumes, often entire banks, which are reversed on the main square. Shocks generated by this operation result in an uncontrolled transfer of mechanical stress that may exceed the limits of mechanical strength of the rock. After the impact, fractures are generated in the bank, departing from the surfaces of pre-existing discontinuities, and may extend to involve portions of sound rock. Considering the commercial value of the material, the use of technologies sometimes less productive (from the point of view of the amount of extracted material), but able to increase the

yield of the deposit is appropriate. For example, cutting chain could allow cropping of blocks with dimensions gauged, technique that is having increasing success in materials such as sedimentary limestone or marble similar to Zandobbio Marble. The most important advantages of the cutting chain are: versatility, good health and safety during operation (no dust, vibration and noise), simplicity of operations and the need for little manpower, absence of induced fracturing in the rock mass, regularity and coplanarity of the cuts (i.e., regularity of extracted blocks). Good results are referred especially in underground excavations, so this option was earnest taken into account.

The experience in Italy shows that – in general – underground quarries require an initial economic effort, but this is later repaid by lower costs during the exploitation and, especially, for final recovery. Instead, the open pit quarries require investments less consistent at the beginning but, in the last period of activity, serving the costs of environmental recovery that can also be very challenging. Usually, all costs are not substantially different (fig. 4). Moreover, usually open pit quarries produce more discarge while underground quarries give better quality selling material.

4. Engineering geology characterization

A detailed geologic, geomorphologic and geomechanic survey coupled with direct subsurface explorations were done. Data were elabotated and analyzed according to the state of the mining art. Studies consist in four distinct phases:

- engineering-geology survey,
- drilling explorations,
- definition of the rock matrix properties,
- geomechanic analysis.

All acquired data are managed in a GIS project. This facilitates the construction of the numerical geological model and a possible new design of the quarry. The structural survey is the direct observation of fractures on a measurement line (I.S.R.M., 1978). Four horizontal scan line was arranged at the base of the fronts of the quarry with the purpose of qualitatively and quantitatively define the characteristics of the discontinuities. The strike and dip of the discontinuities were plotted on Schmidt diagrams, in order to provide a precise indication of their orientation in space and the spatial relationships between the plans. Then, it was possible to perform a statistical analysis of the distribution of the poles for the identification of the most representative orientations for individual families: 4 main discontinuities systems were identified (fig. 5). The intersection between surfaces of discontinuity belonging to different systems originates bands of more weathered rock mass, easily affected by karst dissolution.

Geomechanic scan lines have been georeferenced with GPS. Each measurement is represented by a point at which is associated information on its characteristics (dip and dip direction, spacing, persistence, wall strength, roughness, openings, possible filling thickness and water presence). This approach has proved to be very useful because it allows to correlate measurements of the same discontinuity, but measured in different places and to highlight the characteristic of the rock mass from a more general point of view. With the same GIS software it is also possible to managed the project of cultivation. In such way, the relationship between different hypotheses of exploitation and discontinuities is immediate and simplify the following design phases of excavation, both in surface and underground (fig. 6).

Five drilling were done to investigate the area. RQD indicates a predominantly good or excellent rock mass quality. Also lower va-

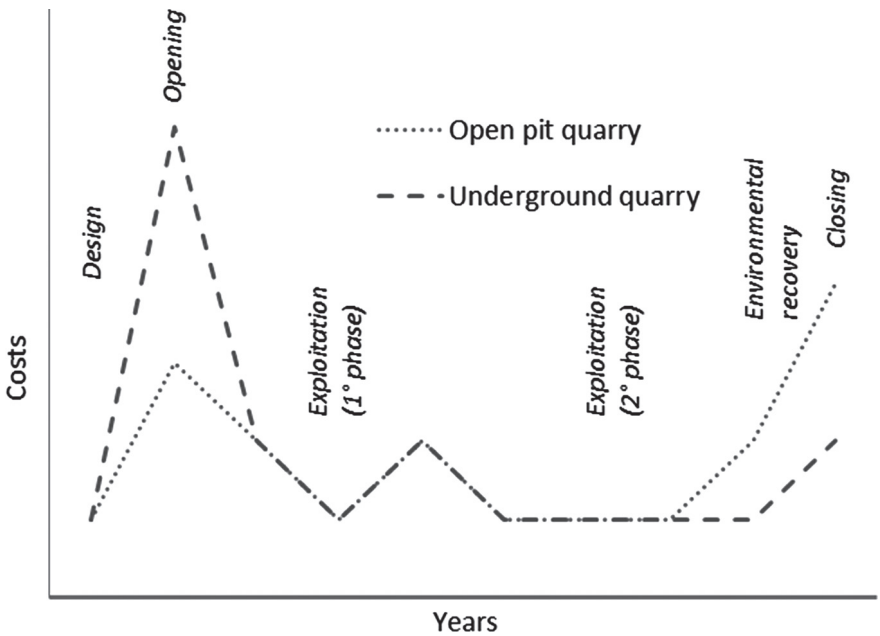

Fig. 4. Ideal comparison between costs of an open pit quarry and an underground one, from the design and opening phases until the environmental recovery phase and closing.
didascalia in italiano

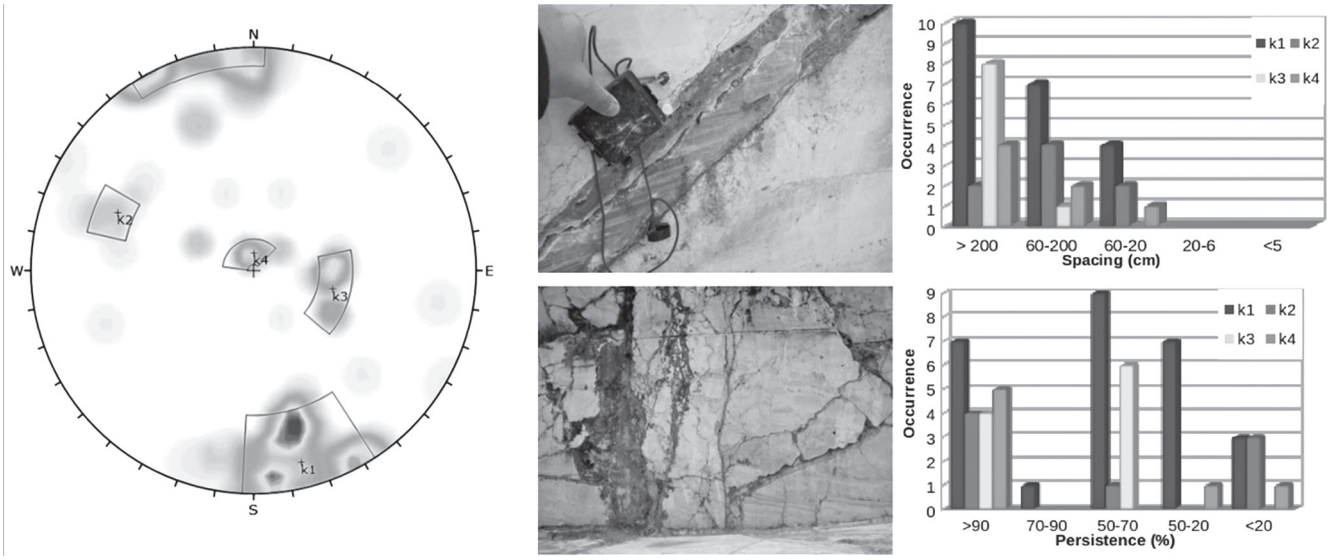

Fig. 5. Results of engineering geology survey: Schmidt Plot histogram (left), histograms for spacing (right upper) and persistence (right lower) measured for each system of discontinuity.
didascalia in italiano

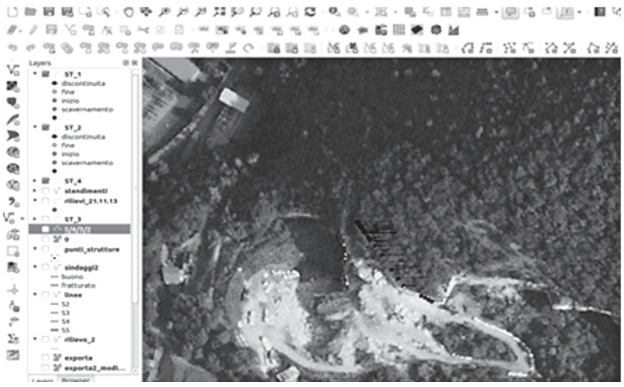

Fig. 6. Representation of the main morphostructures on the main front (top) and management of the structural data in a GIS environment (bottom).
didascalia in italiano

lues were recorded, and samples taken in these portion are characterized by a clear alteration due to the circulation of water and a reddish colour where rock mass is broken up and voids filled with clay and sand. Horizons of recrystallized dolomite with crystals larger than usual are often visible: they are along discontinuities or within vacuoles. An idea of the quality of the product can be obtained from the observation of core samples, representing drillings in a 3D model with a different colour based on RQD and relative product quality (fig. 7): green (marketable material and high RQD); orange (marketable material but low RQD); red (not marketable material or low RQD). On the right side of fig. 7 there are some examples from core samplings with a magnification of re-cristallized carst material. Resulting map shows that green and red categories are more common, instead marketable material with low RQD is limited to a few meters of boreholes.

The uniaxial compressive strength of the intact rock gives an average value of 217 MPa. It represents best conditions of the commercial block, with tests carried out on samples dry and absolutely free of surface of alteration. To provide a value representative of the rock mass, Point Load tests (I.S.R.M., 85) were carried out: they gave for the sound rock a much lower resistance of about 110 MPa, in agreement with tipical value for limestone.

Rock masses were classified according to R.M.R. (Bieniawski, 1989) and G.S.I. (Marinos et

Fig. 7. Topography 3D model with location of drillings (left) and borehole core sample (right).
didascalia in italiano

al, 2005; Hoek et al, 2002) and two main types were identified (tab. 1):

- type 1 is characterized by a basic value of RMR = 63.5 (class II, good rock mass) and a GSI = 85;
- type 2 is characterized by a basic value of RMR = 48 (class III, discrete rock mass) and a GSI = 55.

The shear behaviour of rock joints was calculated using the Barton et Bandis (1982) failure criterion that estimates the peak shear strength of a rock joint. It depends on various parameters: normal stress on the joint surface, joint roughness coefficient (JRC), joint wall compression strength (JCS) and basic friction angle. The scale effect of the peak shear strength of a rockjoint surface includes the effects of specimen size itself and the geometry configuration of the joint surface.

Tab. 1. Rock mass classification and characterization of the quarry.
didascalia in italiano

	Parameter	Rock Mass type 1	Rock Mass type 2
RMR	value	63.5	48
	Class	II	III
	Quality	Good	Fair
Hoek Brown Classification	GSI	85	55
	mi	9	9
	D	0.7	0.7
	Ei	46750	46750
Hoek Brown Criterion	mb	3.95	0.76
	s	0.114	0.0015
	a	0.5	0.5
Failure Envelope Range	σ3 max MPa	0.58	0.55
	Tunnel depth m	40	40
Mohr-Coulomb Fit	c MPa	6.13	0.63
	φ	54.2	53.5
Rock Mass Parameter	σt MPa	3.19	0.21
	σc MPa	37.06	4.11
	σcm MPa	40.28	12.88
	Erm MPa	24907	6902

From a mining standpoint, the presence of the rock mass type 2 (with discontinuities, karst voids or carbonate fills) is disadvantageous because it limits or, in some cases, prevents the extraction of regular blocks. To increase the yield of the quarry is therefore necessary to confine these less productive areas within adeguate pillars or diaphragm, as separators between rooms. In contrast, the underground spaces will develop where the rock mass is of good quality, allowing the extraction of intact blocks. The whole design is aimed to minimize stabilization works: only with these measures cultivation could be economically viable.

5. *Discussion on criteria for design*

Geomechanic data and results from boreholes were used to create a simplified geological model. This model consists in two types of rock masses and in a system of main discontinuity. The voids of cultivation are located in correspondence of healthy rock mass, while the diaphragm will be left in the low quality portions. In addition to geomechanical parameters, quarry design should be economically effective and it needs to respect some conditions:

- excavating useful "stone" leaving poor rockmass quality volumes,
- using the minimum support,
- create optimal directions of the rooms and pillars in comparison with strike and dip of discontinuity.

The correct geometry of the rooms requires the use of numerical models to analyze the stress state in the rock mass produced by cultivation. The final geological model assumes a general break-

down of rock mass, which can be verified using numerical models. In a first stage, the quarry has been designed according to simplified methods and in the next stage the global stability has been calculated with numerical continuum model. Simplified methods permits to obtain two important results: the evaluation of the area to depute at support (pillar and/or diaphragms) and the minimum height of vault, intended as distance between overlapping mining layers. The ratio between rock mass strenght, obtained from Hoek-Brown failure criterion, and geostatic load has been calculated for each underground level and for each rock mass type. The ratio express the minimum planimetric area of rockmass required for self-support. Results indicated a percentage variable from 15% to 40% depending to rockmass type and to depth of chamber.

The height of vaults connecting the pillars have been calculated according to the natural self supporting arch criterion (Bello, 1977). According to this approach, after the opening of the underground chamber an hypothetical parabolic arc is formed. The arc transmits the lithostatic weight to the sides of the chamber (directly on pillars or diaphragms). In order that the arc may perform its function of support, it's necessary that the induced stresses do not exceed the uniaxial compression of the rock, and that the cover has a thickness sufficient to ensure the formation of the arc. The equations used for the calculation of the arc are only geometrical; they don't take into account the geological characteristics of the rock, but they give indication on the cover of the rock necessary according the gap between the pillars. A rock cover of at least 11,5 m above the self supporting arc top has been obtained. This value is incompatible with the shape of open pit exploitation, because doesn't allow the creation of accesses on underground. For these reasons a rock cover of 6 meter has been set.

Also through numerical analysis, a series of possible situations were calculated, changing the distances between the pillars and between the underground levels. For these analysis, different models are mentioned in the literature such as FEM, FDM, BEM, DEM, or FEM/BEM, DEM/FEM. There are no guidelines to decide when a particular model has to be used, but in general it can be said that when the size of the model is same order as the characteristic dimension of the design, a discontinuum model seems to be more suitable (Bobet et al, 2009). If very few or no discontinuities are present continuum models seems to be more suitable. In this case the discontinuities are localized in a specific area and a continuum method can be useful for the objectives of the analysis. Displacement contours generated by Phase2, a 2D finite element software, showed an area of influence coherent with the values obtained from Bello and confirm the influence between overlapping levels. However, the influence is reduced to acceptable values of some millimeters.

In the quarry, the geometry that better respect all conditions is a four levels geometry with irregular disposition and dimension of rooms and pillars (fig. 8). The upper level consists in an experimental panel for testing the cutting machine and monitoring the induced stress. This level has an height and a width of 6 meters. The underlying levels 2 and 3 have four voids with an height of 9 meter and a width variable from 10 m to 7,5 m, while the lower level 4 has three voids with an height of 9 meter and a width of 8 m. Both underground and surface exploitations will be adopted contemporarly.

Mining or tunnelling problems

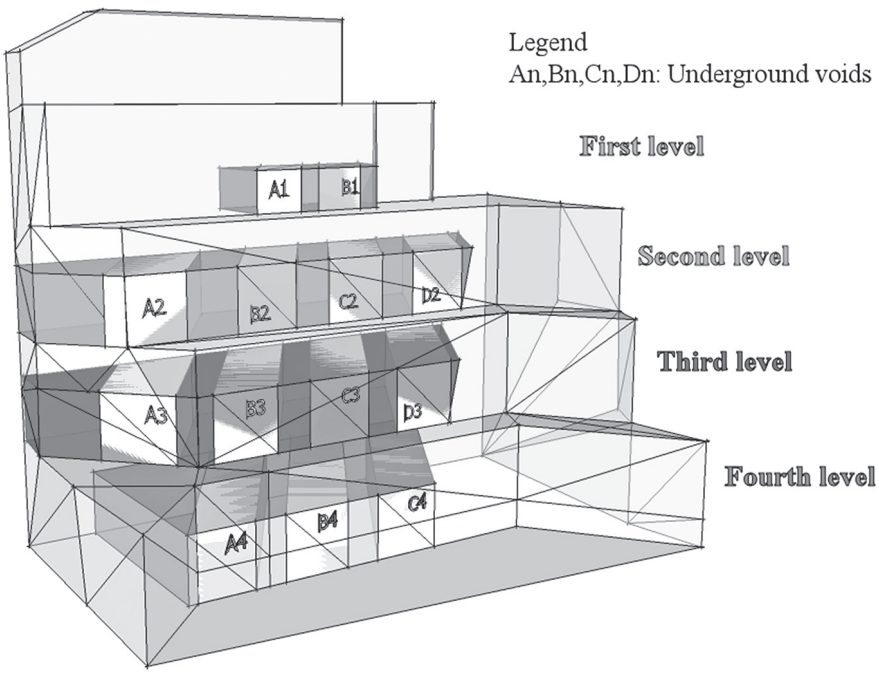

Fig. 8. 3D scheme of the quarry with the underground exploitation. The upper level, of orange colour, is an experimental level to test cutting machine and rockmass deformation.
didascalia in italiano

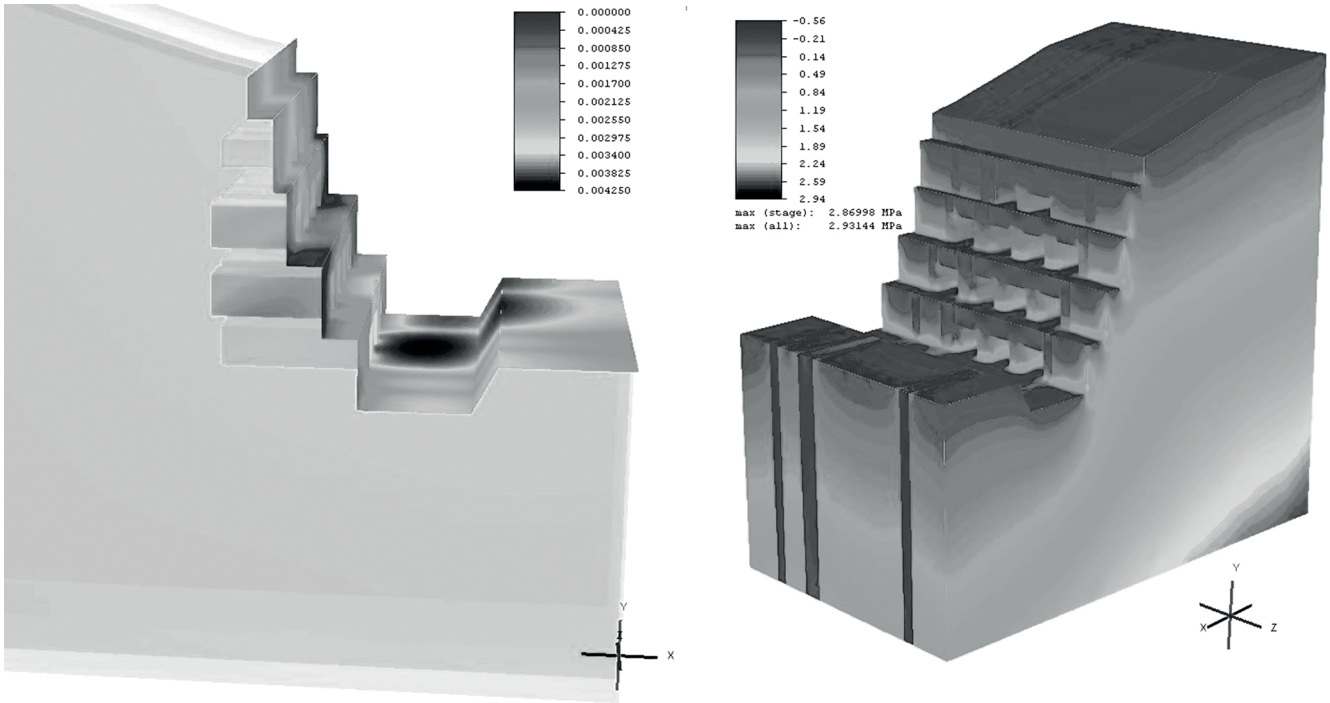

Fig. 9. Results of modeling with the code RS3: Total displacement (left) and mean stress contours (right) for underground excavation
didascalia in italiano

in rock in most cases cannot be approximated to a two dimensional plane strain analysis. The geometry of the excavation has been verified also using a software for 3D FEM analysis of underground excavations called RS3, recently developed by Rocscience. Model geometry is built up by creating a series of extruded two-dimensional slices. Excavation and material boundaries have been defined independently for each slice.

The model consisted of 13 neighboring roofs placed on 4 levels (fig. 9). The geological model consists in two rockmass types, and in some joints that outcrops in the poor quality rock. Different stages have been simulated: 1) situation antecedent to quarry, 2) the present situation, 3) the surface excavation and the underground excavation of the levels proceeding from top to bottom (one step for each level). For every step the in-situ stress field (gravity) is calculated and it includes seismic load (pseudo-static). Graphical representation of the stress induced by underground excavations was calculated by the software. In the model, the biggest stress of about 2,5 MPa is in the lower level, at the base of pillars. Numerical models need to be validated with field measurements to ensure that the results are realistic. If there are large variations in the result, the model needs to be recalibrated by rechecking the critical parameters and the modelling assumptions (Ferrero et Segalini, 2011). The first level was designed according to this suggestions.

From a mining point of view, the passage in underground would entail limitations on quarry attainable due to removal of large blocks and use of the equipment for cutting different if compared to the diamond wire so far used. The use of chain cutting ensures high cutting precision and speed of execution. The characteristics

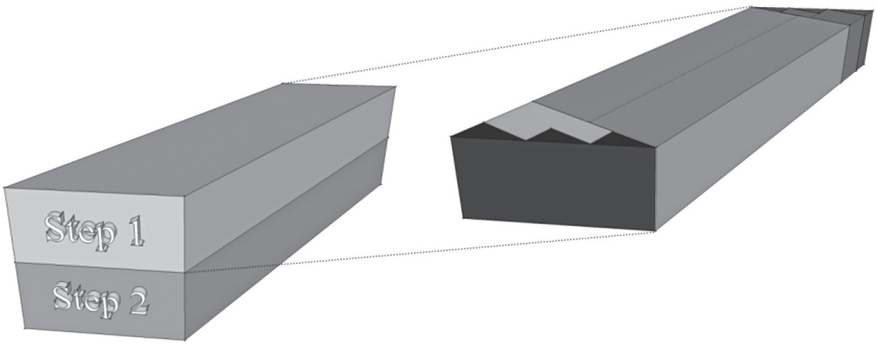

Fig. 10. Scheme of the temporary sequence of exploitation for an ideal void: first and second step. Each step requires: regularization of the entrance according to main discontinuities (red color), squaring cuts to free up the maximum free surface, at the entrance and at the end (colors blue and purple) and actual cultivation of the rooms (orange and green).
didascalia in italiano

and performance of the cutting chain affect the geometry and the cutting patterns and, of course, from these depends the size of the rooms [Sariisik et Sariisik, 2013].

On the basis of these elements, in the simulation was chosen an height of the rooms of 9 meters. Fig. 9 (on the left) explains the sequence of operation of a single room exploitation: each room is exploited starting from the upper half (Step 1) and is then lowered until the final floor (Step 2). For each step there are some operations (fig. 10):

1. regularization of the entrance according to main discontinuities (red color)
2. squaring cuts to free up the maximum free surface, in the area of entrance, or – to increase the yield of the rooms – in the terminal (colors blue and purple);
3. the actual cultivation of the rooms (orange and green).

6. Results

The international request of dimensional stones continues to grow, and the Zandobbio Marble, for it's historical and architectural applications is an high unit price material. Actually there's only an active quarry located in a small area with high scenic and tourist value. Nowadays, the market of the Zandobbio marble and, in general, that of ornamental stones, is international, so it is necessary to have large quantities of material extractable in a short time. Besides, the Zandobbio Marble is marketed according to different varieties that must be part of the offer, even if it is difficult to predict with certainty the aesthetic and textural properties of the extracted materials.

The surface exploitation presents a setting of banks and of fronts non-optimal if compared with the orientation of the main families of discontinuities. The geological situation is further complicated by administrative restrictions: limits of properties, needs of landscape protection and the mining local planning don't allow a further growth of the surfaces interested by quarry. In this situation, the underground exploitation seems the only way to ensure competitiveness of the quarry in the international market,according to the demand of large volumes of material.

In this paper the feasibility of an underground option for the Zandobbio Marble is verified. It involves the creation of an experimental level in surface with two tunnels (the first to be excavated) and three levels below. The final geological model assumes a general breakdown of rock mass, which can be verified using numerical models. Firstly, geologic, geomorphologic and geomechanical studies characterize rock masses permitting accurate numerical modeling.

Higher costs of excavation can be accepted when balanced by high productivity ensured by cutting machine due to high cutting precision, speed of execution and limitation of fractures in the blocks. Moreover, underground option ensures also a lower visual impact and leaves, at the end of the activity, voids that can be easily reused for civil or industrial purposes.

References

Abu Hanieh, A., AbdElall, S., Hasan, A., 2014. *Sustainable development of stone and marble sector*, in Palestine Journal of Cleaner Production, 84, 581-588

Balletto, G., Mei, G., Garau, C., 2015. *Relationship between quarry activity and municipal spatial planning: a possible mediation for the case of Sardinia, Italy*. Sustainability, 7, 16148-16163.

Bello, A., 1977. *Simplified method for stability analysis of underground openings*. Proc. 1st Int. Symp. Rockstone 77, Stockholm, 289-294.

Bieniawski, Z.T., 1989. *Engineering rock mass classifications: a complete manual for engineers and geologists in mining, civil, and petroleum engineering*. John Wiley & Sons.

Bobet, A., Fakhimi, A., Johnson, S., Morris, J., Tonon, F., Yeung, M.R., 2009. *Numerical models in discontinuous media: Review of advances for rock mechanics applications*. Journal of geotechnical and geoenvironmental engineering, 135, 1547-1561

Ferrero, A.M., Segalini, M., 2011. *Assessment of the stability conditions of ancient underground quarries through on site monitoring and numerical modelling*. International Journal of Geoenginnering Case Histories, 6 (2), 65-86.

Fornaro, M., 2001. *L'estrazione di cava per lapidei nelle aree montane: significato, caratteristiche tecniche e problemi ambientali*. Atti Sem. Int. «Le Pietre Ornamentali della Montagna Europea», Luserna San Giovanni – Torre Pellice (TO), 10-12 giugno, 23-46.

Giuliani, A., Chelli, A., Mandrone, G., 2010. *Portoro marble and quarry activities in the gulf of La Spezia (N. Italy): giacimentological framework and historical exploitation techniques*. GEAM., 3. 29-38.

Giuliani, A., Fornaro, M., 2012. *Geo-engineering criteria for an enhancement of historical dimensional stone resources*. Proceedings of 65 Years Mahir Vardar, Istanbul (TR) – Geomechanics, Tunneling and Design of Rock Structures – Special Session. September 19-21, 177-191.

Giuliani A., Filipello. A, Mandrone G., 2016. *Extreme gis applications for 3d visualization aimed to geological and mining modelling*. Italian Journal of Engineering Geology and Environment, 2.

Hoek, E., Carranza-Torres, C.T., Cor-

kum, B., *Hoek-Brown failure criterion-2002 edition*. Proc. fifth North American rock mechanics symposium, 2002, 1, 267-273.

ISPRA, 2012. *Carta Geologica d'Italia alla scala 1:50.000. Foglio 098 Bergamo*. Bersezio, R., Bini, A., Ferliga, C., Gelati, R. eds.

I.S.R.M. 1978. *Suggested methods for the quantitative description of discontinuities in rock masses*. Int. J. Rock Mech. Min. Sci. & Geomech. Abstr., 15, 319-368.

I.S.R.M. 1985. *Suggested method for determining point load strength*. Int. J. Rock Mech. Min. Sci. and Geomech. Abstr., 22 (2), 51-60.

Jadoul, F., Galli, M.T., 2008. *The Hettangian shallow water carbonates after the Triassic/Jurassic biocalcification crisis: the Albenza Formation in the Western Southern Alps*. Riv. Ital. Paleontol. Stratigr., 114, 453-470.

Marinos, V., Marinos, P., & Hoek, E, 2005. *The geological strength index: applications and limitations*. Bulletin of Engineering Geology and the Environment, 64(1), 55-65.

Montani, C., 2013. *XXIV Rapporto Marmo e pietre nel mondo*. Aldus Casa di Edizioni in Carrara, 149.

Pimentel, B.S., Santibanez Gonzalez, E, Barbosa, G.N.O., 2016. *Decision-support models for sustainable mining networks: fundamentals and challenges*. Journal of Cleaner Production, 112, 2145-2157.

Sariisik, A., Sariisik, G., 2013. *Investigation of the cutting performance of the natural stone block production in quarries with armed chain cutting machine*. Proc. Inst. Mech. Eng. C.J. Mech. Eng. Sci., 227, 155-165.

Vintró, C., Sanmiquel L., Freijo, M., 2014. *Environmental sustainability in the mining sector: evidence from Catalan companies*. Journal of Cleaner Production, 84, 155-163.

Strengthening of Slope by Using Banyan Tree as Biotechnological Improvement.

Acknowledgements

SIMA srl for the opportunity to study its quarry, Prof. Anna Maria Ferrero for suggestiong in modelling, Prof. Mauro Fornaro for incouraging the research.